D1: Secondary protection for host board

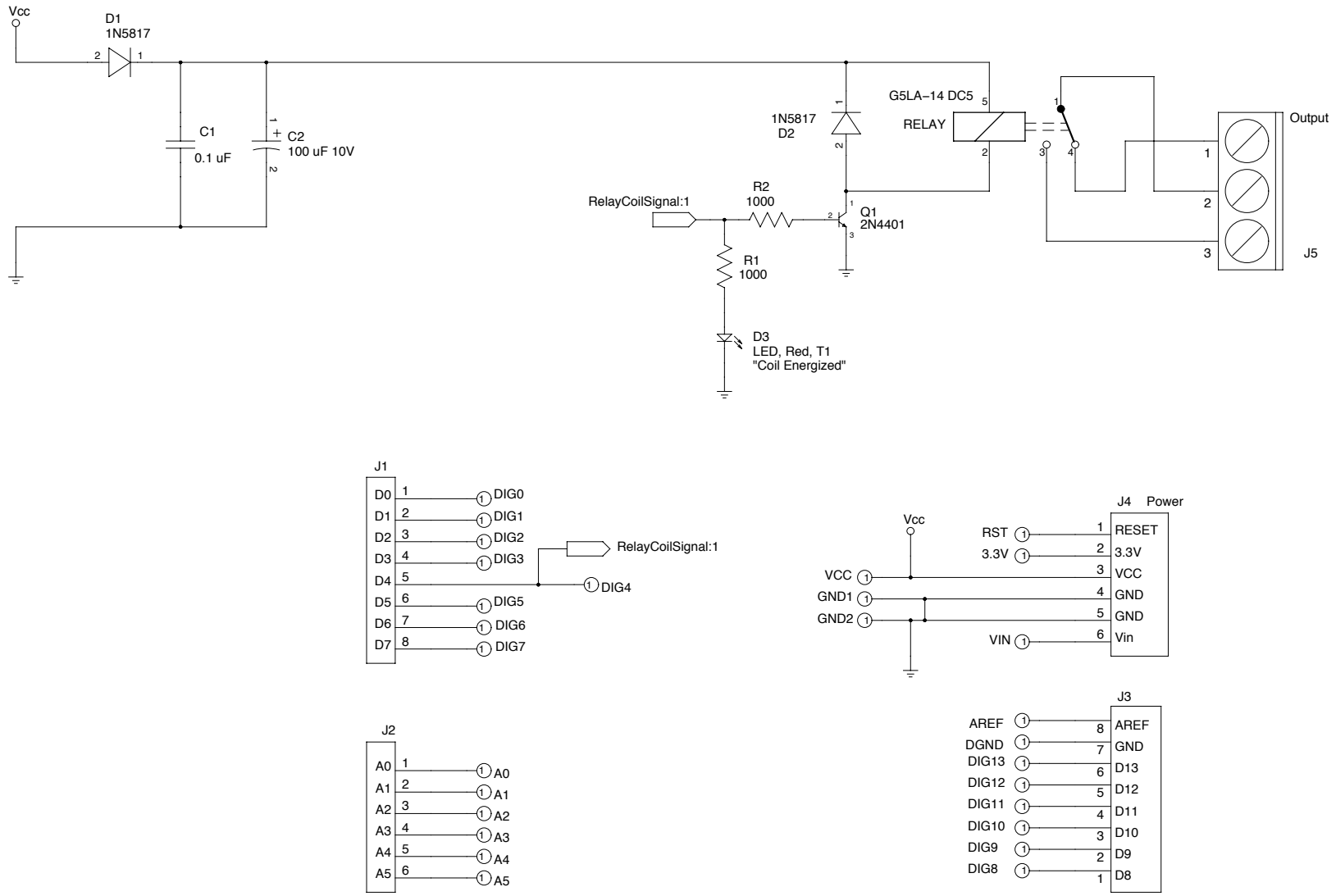

An Open−Source Design by
Evil Mad Scientist Laboratories
www.evilmadscientist.com

Copyright 2012, Windell H. Oskay/Evil Mad Science LLC
Distributed under the TAPR Open Hardware License
www.tapr.org/OHL

TITLE	Evil Mad Science Relay Shield for Arduino		
FILE:		REVISION:	A, May 2012
PAGE	1 OF 1	DRAWN BY:	Windell H. Oskay